ARCADIA INC.

SERIES IPT-200 AWNING WINDOW (WZ3) (IMPACT)

INSTALLATION NOTES:

1. ONE (1) INSTALLATION ANCHOR IS REQUIRED AT EACH ANCHOR LOCATION SHOWN.
2. THE NUMBER OF INSTALLATION ANCHORS DEPICTED IS THE MINIMUM NUMBER OF ANCHORS TO BE USED FOR PRODUCT INSTALLATION.
3. INSTALL INDIVIDUAL INSTALLATION ANCHORS WITHIN A TOLERANCE OF ±1/2 INCH OF THE DEPICTED LOCATION IN THE ANCHOR LAYOUT DETAIL (I.E., WITHOUT CONSIDERATION OF TOLERANCES). TOLERANCES ARE NOT CUMULATIVE FROM ONE INSTALLATION ANCHOR TO THE NEXT.
4. SHIM AS REQUIRED AT EACH INSTALLATION ANCHOR WITH LOAD BEARING SHIM(S). MAXIMUM ALLOWABLE SHIM STACK TO BE 1/4 INCH. SHIM WHERE SPACE OF 1/16 INCH OR GREATER OCCURS. SHIM(S) SHALL BE CONSTRUCTED OF HIGH DENSITY PLASTIC OR BETTER.
5. FOR INSTALLATION INTO WOOD FRAMING USE #12 WOOD SCREWS OF SUFFICIENT LENGTH TO ACHIEVE 1 1/2 INCH MINIMUM EMBEDMENT INTO WOOD SUBSTRATE.
6. FOR INSTALLATION THROUGH 1X BUCK TO CONCRETE/MASONRY, OR DIRECTLY INTO CONCRETE/MASONRY, USE 1/4 INCH DIAMETER ITW TAPCONS OF SUFFICIENT LENGTH TO ACHIEVE 1 1/2 INCH MINIMUM EMBEDMENT.
7. FOR INSTALLATION THROUGH METAL STUD USE #12-24 SELF-DRILLING SCREWS, GR. 5 OF SUFFICIENT LENGTH TO ACHIEVE 3 THREADS MINIMUM PENETRATION BEYOND METAL FRAME SUBSTRATE.
8. MINIMUM EMBEDMENT AND EDGE DISTANCE EXCLUDE WALL FINISHES, INCLUDING BUT NOT LIMITED TO STUCCO, FOAM, BRICK VENEER, AND SIDING.
9. INSTALLATION ANCHORS AND ASSOCIATED HARDWARE MUST BE MADE OF CORROSION RESISTANT MATERIAL OR HAVE A CORROSION RESISTANT COATING.
10. FOR HOLLOW BLOCK AND GROUT FILLED BLOCK, DO NOT INSTALL INSTALLATION ANCHORS INTO MORTAR JOINTS. EDGE DISTANCE IS MEASURED FROM FREE EDGE OF BLOCK OR EDGE OF MORTAR JOINT INTO FACE SHELL OF BLOCK.
11. INSTALLATION ANCHORS SHALL BE INSTALLED IN ACCORDANCE WITH ANCHOR MANUFACTURER'S INSTALLATION INSTRUCTIONS, AND ANCHORS SHALL NOT BE USED IN SUBSTRATES WITH STRENGTHS LESS THAN THE MINIMUM STRENGTH SPECIFIED BY THE ANCHOR MANUFACTURER.
12. INSTALLATION ANCHOR CAPACITIES FOR PRODUCTS HEREIN ARE BASED ON SUBSTRATE MATERIALS WITH THE FOLLOWING PROPERTIES:
    A. WOOD - MINIMUM SPECIFIC GRAVITY OF 0.55.
    B. CONCRETE -MINIMUM COMPRESSIVE STRENGTH OF 3000 PSI.
    C. MASONRY - UNIT STRENGTH CONFORMS TO ASTM C-90 WITH MINIMUM COMPRESSIVE STRENGTH OF 2000 PSI AND GROUT CONFORMS TO ASTM C476, MINIMUM GROUT COMPRESSIVE STRENGTH OF 2000 PSI.
    D. STEEL - MINIMUM YIELD STRENGTH OF 33 KSI. MINIMUM 18 GA. WALL THICKNESS.
    E. ALUMINUM - MINIMUM 1/8 INCH THICK, 6063-T5 ALUMINUM.
13. INSTALLATION SHALL FOLLOW MANUFACTURERS RECOMMENDATIONS FOR SEALING WINDOWS AND ACCESSORY ITEMS.

GENERAL NOTES:

1. THE PRODUCT SHOWN HEREIN IS DESIGNED AND MANUFACTURED TO COMPLY WITH THE CURRENT FLORIDA BUILDING CODE (FBC), **EXCLUDING** HVHZ AND HAS BEEN EVALUATED ACCORDING TO THE FOLLOWING:
    - AAMA/WDMA/CSA 101/I.S.2/A440-17
    - ASTM E1886-19
    - ASTM E1996-20
    - ASTM E330-14
    - ASTM E331-00(2009)
2. ADEQUACY OF THE EXISTING STRUCTURAL CONCRETE/MASONRY, 2X FRAMING AND METAL STUD FRAMING AS A MAIN WIND FORCE RESISTING SYSTEM CAPABLE OF WITHSTANDING AND TRANSFERRING APPLIED PRODUCT LOADS TO THE FOUNDATION IS THE RESPONSIBILITY OF THE ENGINEER OR ARCHITECT OF RECORD FOR THE PROJECT OF INSTALLATION.
3. 1X AND 2X BUCKS (WHEN USED) SHALL BE DESIGNED AND ANCHORED TO PROPERLY TRANSFER ALL LOADS TO THE STRUCTURE. BUCK DESIGN AND INSTALLATION IS THE RESPONSIBILITY OF THE ENGINEER OR ARCHITECT OF RECORD FOR THE PROJECT OF INSTALLATION.
4. THE INSTALLATION DETAILS DESCRIBED HEREIN ARE GENERIC AND MAY NOT REFLECT ACTUAL CONDITIONS FOR A SPECIFIC SITE. IF SITE CONDITIONS CAUSE INSTALLATION TO DEVIATE FROM THE REQUIREMENTS DETAILED HEREIN, A LICENSED ENGINEER OR ARCHITECT SHALL PREPARE SITE SPECIFIC DOCUMENTS FOR USE WITH THIS DOCUMENT.
5. APPROVED IMPACT PROTECTIVE SYSTEM **IS NOT REQUIRED** ON THIS PRODUCT IN WIND ZONE 3 OR LESS.
6. APPROVED IMPACT PROTECTIVE SYSTEM **IS REQUIRED** ON THIS PRODUCT IN WIND ZONE 4.
7. WINDOW FRAME MATERIAL: ALUMINUM 6063-T6
8. DISSIMILAR METALS INCLUDING FASTENERS THAT MAY COME INTO CONTACT WITH ALUMINUM UNIT FRAMING SHALL BE PROTECTED IN ACCORDANCE WITH THE CURRENT FBC.
9. GLASS MEETS THE REQUIREMENTS OF ASTM E 1300 GLASS CHARTS. SEE SHEET 3 FOR GLAZING DETAIL.

TABLE OF CONTENTS

SHEET	SHEET DESCRIPTION
1	INSTALLATION & GENERAL NOTES
2	ELEVATION, ANCHOR LAYOUT, & DESIGN PRESSURE TABLE
3	GLAZING DETAIL AND GLASS CAPACITY TABLE
4	VERTICAL SECTIONS
5	HORIZONTAL SECTIONS
6	BILL OF MATERIALS AND COMPONENTS

DESIGN PRESSURE TABLE

MAX. FRAME SIZE	MAX. DP	IMPACT RATING
58.25" X 34.25"	+60/-60 PSF	MISSILE LEVEL C

NOTES:
1. MAXIMUM SIZE LISTED ABOVE IS AS-TESTED OVERALL SINGLE UNIT FRAME SIZE, SEE SHEET 2 FOR ALTERNATE APPROVED FRAME SIZES & HARDWARE OPTIONS.
2. SEE SHEET 3 FOR DESIGN PRESSURES LIMITED BY GLASS SIZE AND FOR GLAZING DETAIL.
3. MAXIMUM FRAME SQUARE FOOTAGE SHALL NOT EXCEED 13.85 SQ. FT.

arcadia
2301 EAST VERNON AVE.
VERNON, CA 90058
PH: (323) 771-9819

TITLE: SERIES T-200 AWNING WINDOW (WZ3) (IMPACT)

INSTALLATION & GENERAL NOTES

PREPARED BY:
BUILDING DROPS, INC.
398 E. DANIA BEACH BLVD., STE. 338
DANIA BEACH, FL 33004
PH: (954)399-8478
FAX: (954)744.4738
WEB: www.buildingdrops.com
BUILDING DROPS

REMARKS	BY	DATE
2023 CODE CHANGE	MG	06/23

THE INSTALLATION DETAILS DESCRIBED HEREIN ARE GENERIC AND MAY NOT REFLECT ACTUAL CONDITIONS FOR A SPECIFIC SITE. IF SITE CONDITIONS CAUSE INSTALLATION TO DEVIATE FROM THE REQUIREMENTS DETAILED HEREIN, A LICENSED ENGINEER OR ARCHITECT SHALL PREPARE SITE SPECIFIC DOCUMENTS FOR USE WITH THIS DOCUMENT.

Digitally signed by Hermes F. Norero, P.E.
Reason: I am approving this document
Date: 2023.07.11 10:33:17 -03'00'

HERMES F. NORERO
LICENSE
No. 73778
STATE OF
FLORIDA
PROFESSIONAL ENGINEER

HERMES F. NORERO, P.E.
FLORIDA P.E. LICENSE NO. 73778
BUILDING DROPS, INC
398 E. DANIA BEACH BLVD. # 338
DANIA BEACH, FL 33004
FBPE CERT. OF AUTHORIZATION No. 29578

FL #: FL40954

DATE: 01.02.22

DWG. BY: SH | CHK. BY: HN

SCALE: NTS

DWG. #: ARC004

SHEET: 1 OF 6

6/12/2023 1:07 PM
z:\projects\arcadia, inc\cc-23-0581 - fbc 2023 code change\dwgs\fl40954\arc004.dwg

ELEVATION, ANCHOR LAYOUT, & DESIGN PRESSURE TABLE

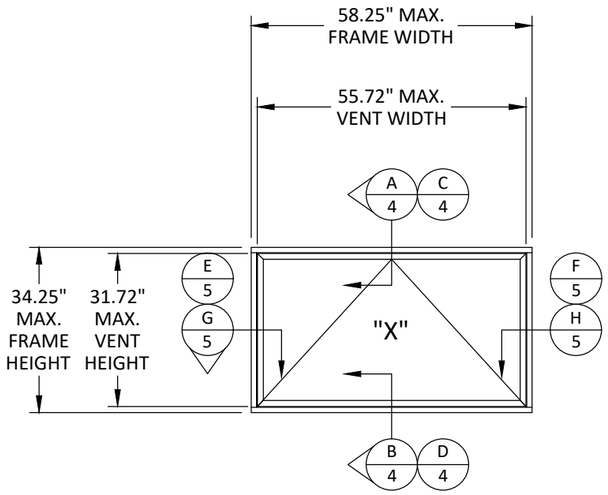

ELEVATION

DESIGN PRESSURE (PSF)			
NOMINAL DIMS.		"X" CONFIGURATION	
FRAME HEIGHT 'in.'	FRAME WIDTH 'in.'	EXT. (+)	INT. (-)
16.25	34.25	60.0	60.0
22.25		60.0	60.0
28.25		60.0	60.0
34.25		60.0	60.0
40.25		51.1	51.1
46.25		44.4	44.4
52.25		39.3	39.3
16.25	40.25	60.0	60.0
22.25		60.0	60.0
28.25		60.0	60.0
34.25		60.0	60.0
40.25		51.1	51.1
46.25		44.4	44.4
49.25		41.7	41.7
16.25	46.25	60.0	60.0
22.25		60.0	60.0
28.25		60.0	60.0
34.25		60.0	60.0
40.25		51.1	51.1
42.25		48.6	48.6

DESIGN PRESSURE (PSF)			
NOMINAL DIMS.		"X" CONFIGURATION	
FRAME HEIGHT 'in.'	FRAME WIDTH 'in.'	EXT. (+)	INT. (-)
16.25	52.25	60.0	60.0
22.25		60.0	60.0
28.25		60.0	60.0
34.25		60.0	60.0
37.25		55.2	55.2
16.25	58.25	60.0	60.0
22.25		60.0	60.0
28.25		60.0	60.0
34.25		60.0	60.0
16.25	64.25	60.0	60.0
22.25		60.0	60.0
28.25		60.0	60.0
30.25		60.0	60.0
16.25	70.25	60.0	60.0
22.25		60.0	60.0
28.25		60.0	60.0

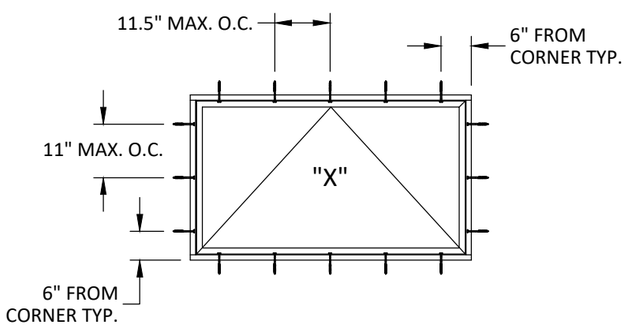

ANCHOR LAYOUT

THRU FRAME

HARDWARE SCHEDULE

HARDWARE TYPE	DESCRIPTION
HURRICANE CAM HANDLES	THREE CAM HANDLES 12" FROM EACH INTERIOR CORNER AND CENTERED. SECURED WITH TWO (2) #10 X 1/2" PFH SCREWS AND A 3/16" ALUMINUM SPACER.
HURRICANE STRIKES	THREE STRIKES 12" FROM EACH INTERIOR CORNER AND CENTERED. SECURED WITH TWO (2) #10 X 3/8" PFH SCREWS.
TRUTH EGRESS HINGES	TWO (2) HINGES SECURED TO THE FRAME WITH THREE (3) #10 X 1/2" PRH SCREWS AND TO THE SASH RAILS WITH #10 X 3/8" PRH SCREWS.

arcadia

2301 EAST VERNON AVE.
VERNON, CA 90058
PH: (323) 771-9819

TITLE: SERIES T-200 AWNING WINDOW (WZ3) (IMPACT)

ELEVATION, ANCHOR LAYOUT, & DESIGN PRESSURE TABLE

PREPARED BY:
BUILDING DROPS, INC.
398 E. DANIA BEACH BLVD., STE. 338
DANIA BEACH, FL 33004
PH: (954)399-8478
FAX: (954)744.4738
WEB: www.buildingdrops.com

REMARKS	BY	DATE
2023 CODE CHANGE	MG	06/23

THE INSTALLATION DETAILS DESCRIBED HEREIN ARE GENERIC AND MAY NOT REFLECT ACTUAL CONDITIONS FOR A SPECIFIC SITE. IF SITE CONDITIONS CAUSE INSTALLATION TO DEVIATE FROM THE REQUIREMENTS DETAILED HEREIN, A LICENSED ENGINEER OR ARCHITECT SHALL PREPARE SITE SPECIFIC DOCUMENTS FOR USE WITH THIS DOCUMENT.

HERMES F. NORERO LICENSE No. 73778 STATE OF FLORIDA PROFESSIONAL ENGINEER

HERMES F. NORERO, P.E.
FLORIDA P.E. No. 73778
BUILDING DROPS, INC
398 E. DANIA BEACH BLVD. # 338
DANIA BEACH, FL 33004
FBPE CERT. OF AUTHORIZATION No. 29578

FL #: FL40954

DATE: 01.02.22

DWG. BY: SH | CHK. BY: HN

SCALE: NTS

DWG. #: ARC004

SHEET: 2 OF 6

6/12/2023 1:07 PM
z:\projects\arcadia, inc\cc-23-0581 - fbc 2023 code change\dwgs\fl40954\arc004.dwg

GLAZING DETAIL & GLASS CAPACITY TABLE

GLASS LOAD CAPACITY (PSF)		
DAYLIGHT OPENING (IN)		GLASS TYPE 1
DLO HEIGHT	DLO WIDTH	EXT. (+) INT. (-)
17.25	35.25	60.0
23.25		60.0
29.25		60.0
35.25		49.8
41.25		53.9
43.25		49.7
17.25	41.25	60.0
23.25		60.0
29.25		60.0
35.25		49.8
37.25		47.1
17.25	47.25	60.0
23.25		60.0
29.25		60.0
32.25		54.4
17.25	53.25	60.0
23.25		60.0
29.25		60.0
17.25	59.25	60.0
23.25		60.0
26.25		60.0
17.25	65.25	60.0
23.25		60.0

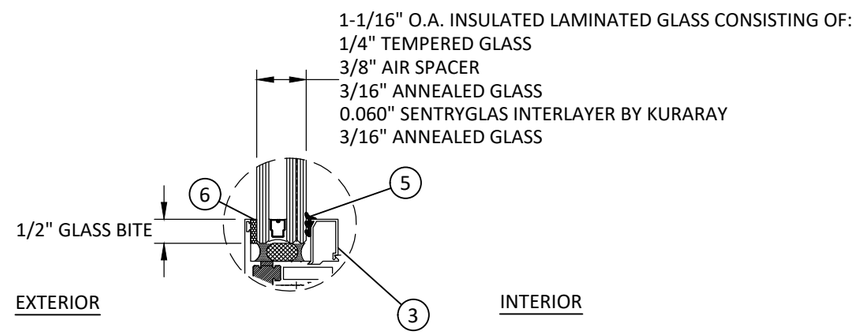

GLAZING NOTES:

1. GLASS TYPE COMPLIES WITH ASTM E1300 REQUIREMENTS .
2. WHERE SAFETY GLAZING IS REQUIRED SACRIFICIAL LITE SHALL USE 1/4" TEMPERED GLASS.
3. SETTING BLOCKS TO BE LOCATED AT 1/4 SPAN LENGTH FOR GLASS WIDER THAN 36" AS PER FBC CHAPTER 24.
4. SETTING BLOCK DUROMETER HARDNESS OF 70-90 (SHORE A) AS REFERENCED IN FBC CHAPTER 24.

arcadia

2301 EAST VERNON AVE.
VERNON, CA 90058
PH: (323) 771-9819

TITLE: SERIES T-200 AWNING WINDOW (WZ3) (IMPACT)

GLAZING DETAIL & GLASS CAPACITY TABLE

PREPARED BY:
BUILDING DROPS, INC.
398 E. DANIA BEACH BLVD., STE. 338
DANIA BEACH, FL 33004
PH: (954)399-8478
FAX: (954)744.4738
WEB: www.buildingdrops.com
BUILDING DROPS

REMARKS	BY	DATE
2023 CODE CHANGE	MG	06/23

THE INSTALLATION DETAILS DESCRIBED HEREIN ARE GENERIC AND MAY NOT REFLECT ACTUAL CONDITIONS FOR A SPECIFIC SITE. IF SITE CONDITIONS CAUSE INSTALLATION TO DEVIATE FROM THE REQUIREMENTS DETAILED HEREIN, A LICENSED ENGINEER OR ARCHITECT SHALL PREPARE SITE SPECIFIC DOCUMENTS FOR USE WITH THIS DOCUMENT.

HERMES F. NORERO LICENSE No. 73778 STATE OF FLORIDA PROFESSIONAL ENGINEER

HERMES F. NORERO, P.E.
FLORIDA P.E. No. 73778
BUILDING DROPS, INC
398 E. DANIA BEACH BLVD. # 338
DANIA BEACH, FL 33004
FBPE CERT. OF AUTHORIZATION No. 29578

FL #: FL40954

DATE: 01.02.22

DWG. BY: SH

CHK. BY: HN

SCALE: NTS

DWG. #: ARC004

SHEET: 3 OF 6

6/12/2023 1:07 PM
z:\projects\arcadia, inc\cc-23-0581 - fbc 2023 code change\dwgs\fl40954\arc004.dwg

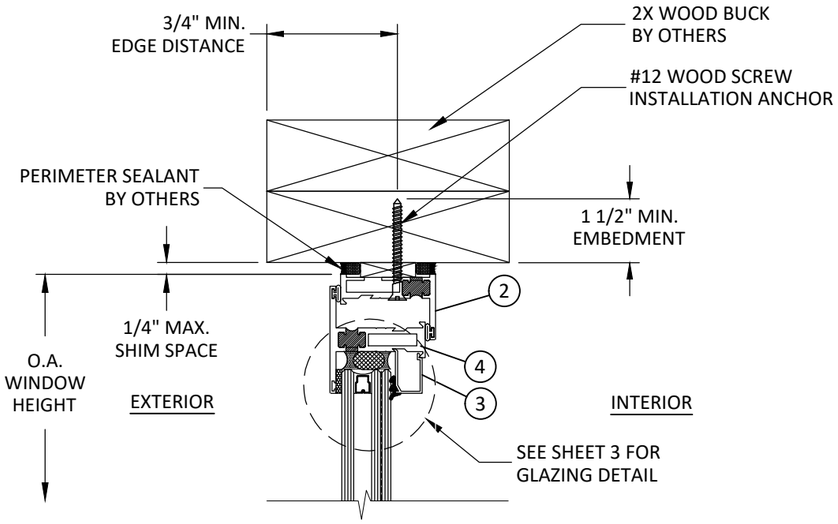

A4 VERTICAL SECTION

2X WOOD BUCK

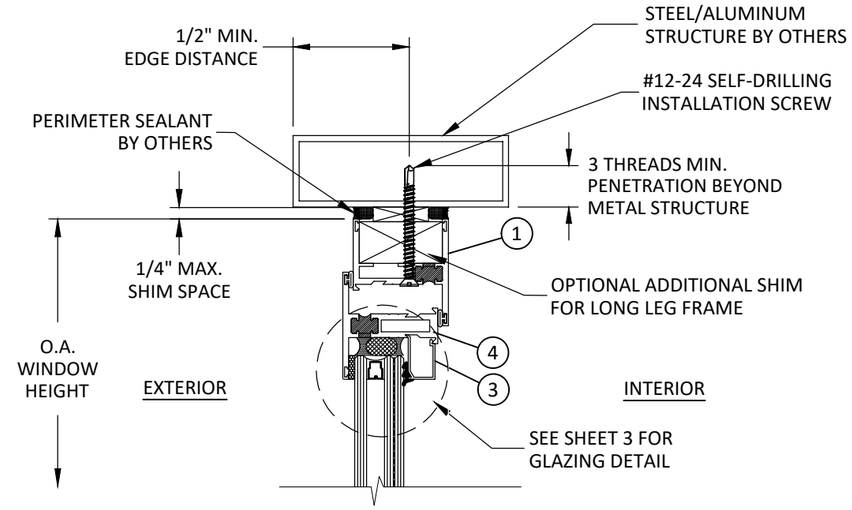

C4 VERTICAL SECTION

STEEL/ALUMINUM STRUCTURE

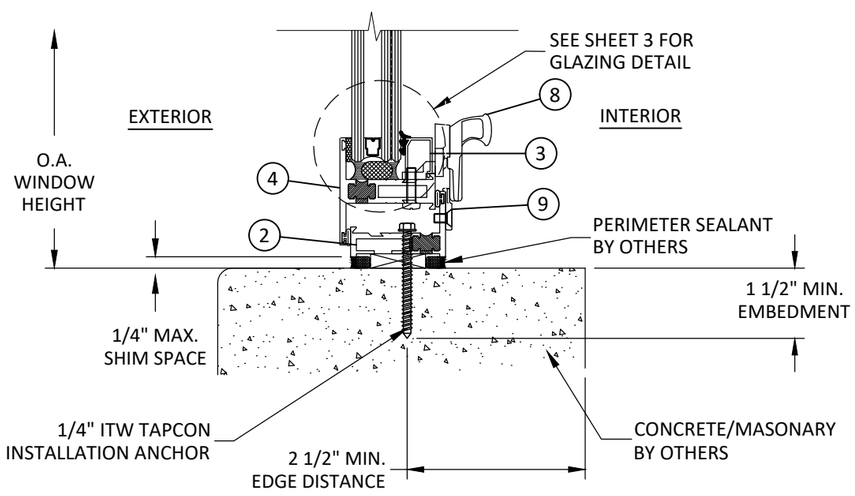

B4 VERTICAL SECTION

CONCRETE/MASONRY

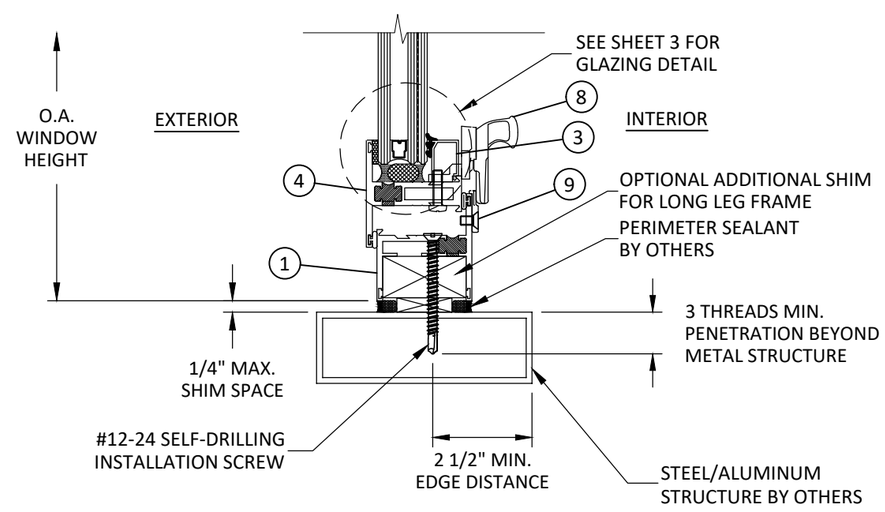

D4 VERTICAL SECTION

STEEL/ALUMINUM STRUCTURE

arcadia
2301 EAST VERNON AVE.
VERNON, CA 90058
PH: (323) 771-9819

TITLE: SERIES T-200 AWNING WINDOW (WZ3) (IMPACT) VERTICAL SECTIONS

PREPARED BY:
BUILDING DROPS, INC.
398 E. DANIA BEACH BLVD., STE. 338
DANIA BEACH, FL 33004
PH: (954)399-8478
FAX: (954)744.4738
WEB: www.buildingdrops.com
BUILDING DROPS

REMARKS	BY	DATE
2023 CODE CHANGE	MG	06/23

THE INSTALLATION DETAILS DESCRIBED HEREIN ARE GENERIC AND MAY NOT REFLECT ACTUAL CONDITIONS FOR A SPECIFIC SITE. IF SITE CONDITIONS CAUSE INSTALLATION TO DEVIATE FROM THE REQUIREMENTS DETAILED HEREIN, A LICENSED ENGINEER OR ARCHITECT SHALL PREPARE SITE SPECIFIC DOCUMENTS FOR USE WITH THIS DOCUMENT.

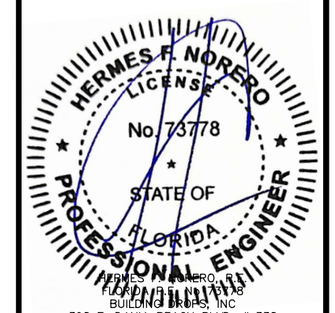

FL #: FL40954

DATE: 01.02.22

DWG. BY: SH | CHK. BY: HN

SCALE: NTS

DWG. #: ARC004

SHEET: 4 OF 6

6/12/2023 1:07 PM
z:\projects\arcadia, inc\cc-23-0581 - fbc 2023 code change\dwgs\fl40954\arc004.dwg

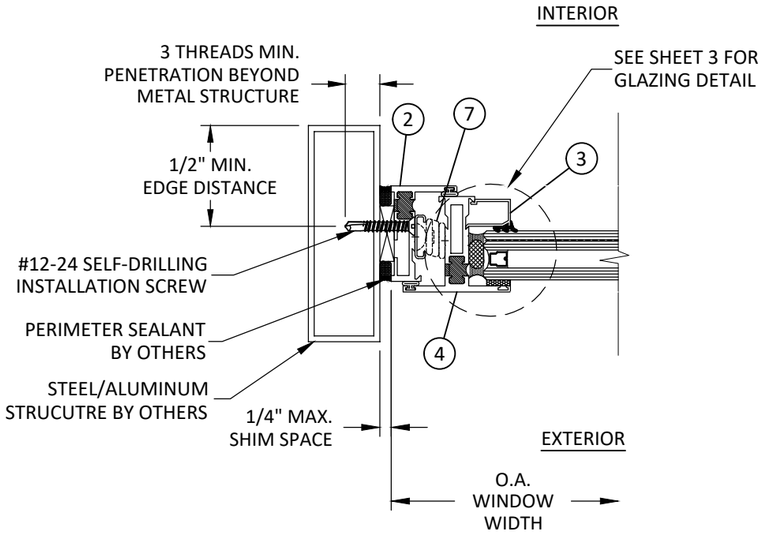

E/5 HORIZONTAL SECTION

STEEL/ALUMINUM STRUCTURE

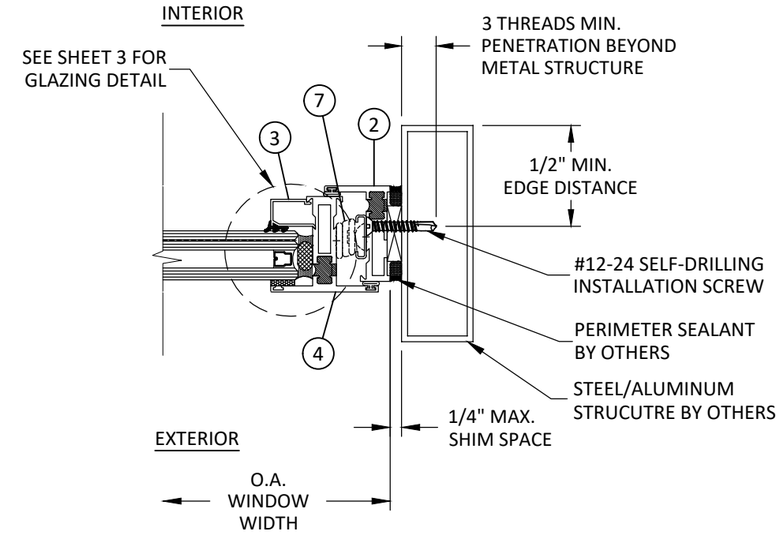

F/5 HORIZONTAL SECTION

STEEL/ALUMINUM STRUCTURE

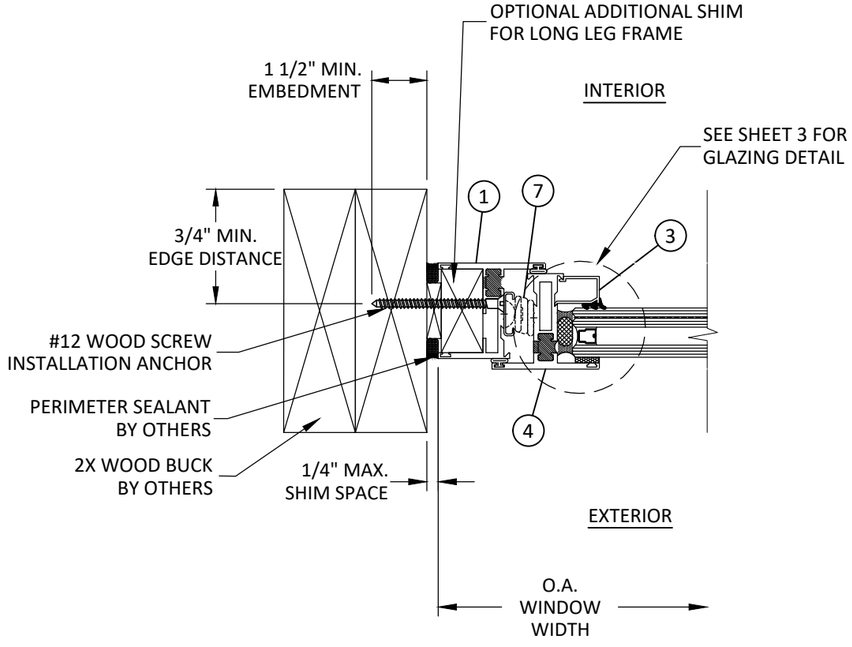

G/5 HORIZONTAL SECTION

2X WOOD BUCK

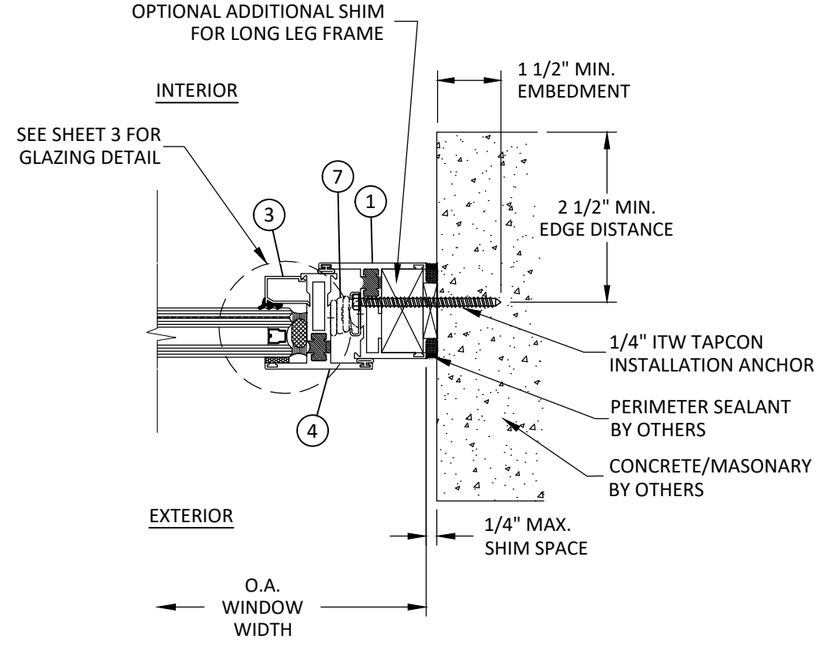

H/5 HORIZONTAL SECTION

CONCRETE/MASONRY

arcadia
2301 EAST VERNON AVE.
VERNON, CA 90058
PH: (323) 771-9819

TITLE: SERIES T-200 AWNING WINDOW (WZ3) (IMPACT) HORIZONTAL SECTIONS

PREPARED BY: BUILDING DROPS, INC.
398 E. DANIA BEACH BLVD., STE. 338
DANIA BEACH, FL 33004
PH: (954)399-8478
FAX: (954)744.4738
WEB: www.buildingdrops.com
BUILDING DROPS

REMARKS	BY	DATE
2023 CODE CHANGE	MG	06/23

THE INSTALLATION DETAILS DESCRIBED HEREIN ARE GENERIC AND MAY NOT REFLECT ACTUAL CONDITIONS FOR A SPECIFIC SITE. IF SITE CONDITIONS CAUSE INSTALLATION TO DEVIATE FROM THE REQUIREMENTS DETAILED HEREIN, A LICENSED ENGINEER OR ARCHITECT SHALL PREPARE SITE SPECIFIC DOCUMENTS FOR USE WITH THIS DOCUMENT.

HERMES F. NORERO LICENSE No. 73778 STATE OF FLORIDA PROFESSIONAL ENGINEER
HERMES F. NORERO, P.E.
FLORIDA P.E. No. 73778
BUILDING DROPS, INC
398 E. DANIA BEACH BLVD. # 338
DANIA BEACH, FL 33004
FBPE CERT. OF AUTHORIZATION No. 29578

FL #: FL40954

DATE: 01.02.22

DWG. BY: SH | CHK. BY: HN

SCALE: NTS

DWG. #: ARC004

SHEET: 5 OF 6

6/12/2023 1:07 PM
z:\projects\arcadia, inc\cc-23-0581 - fbc 2023 code change\dwgs\fl40954\arc004.dwg

6/12/2023 1:07 PM

BILL OF MATERIALS				
ITEM	PART No.	DESCRIPTION	MATERIAL	MANUF./SUPPLIER/REMARKS
1	WTH-01	FRAME HEAD, SILL, & JAMB (LONG LEG)	6063-T6	ARCADIA INC.
2	WTH-02	FRAME HEAD, SILL, & JAMB (SHORT LEG)	6063-T6	ARCADIA INC.
3	WWB-03	GLAZING STOP	6063-T6	ARCADIA INC.
4	WTT-02	SASH RAIL	6063-T6	ARCADIA INC.
5	E260	GLAZING GASKET	E.P.D.M	VIP RUBBER
6	V994	GLAZING TAPE	-	NORTON
7	331	EGRESS HINGE	STAINLESS STEEL	TRUTH HARDWARE
8	162-001	CAM LOCK	STAINLESS STEEL	BRONZE CRAFT
9	282-055	LOCK STRIKE	STAINLESS STEEL	BRONZE CRAFT
10	S5051-5	WEATHER-STRIP	-	VIP RUBBER

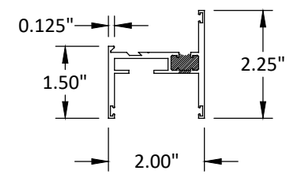

1 FRAME (LONG LEG)
6063-T6

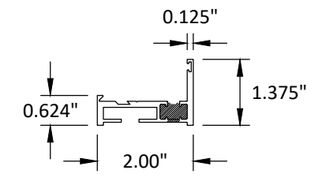

2 FRAME (SHORT LEG)
6063-T6

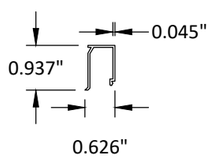

3 GLAZING STOP
6063-T6

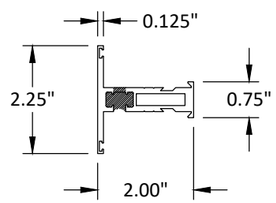

4 SASH RAIL
6063-T6

z:\projects\arcadia, inc\cc-23-0581 - fbc 2023 code change\dwgs\fl40954\arc004.dwg

arcadia
2301 EAST VERNON AVE.
VERNON, CA 90058
PH: (323) 771-9819

TITLE:
SERIES T-200
AWNING WINDOW
(WZ3) (IMPACT)
BILL OF MATERIALS
AND COMPONENTS

PREPARED BY:
BUILDING DROPS, INC.
398 E. DANIA BEACH BLVD., STE. 338
DANIA BEACH, FL 33004
PH: (954)399-8478
FAX: (954)744.4738
WEB: www.buildingdrops.com
BUILDING DROPS

REMARKS	BY	DATE
2023 CODE CHANGE	MG	06/23

THE INSTALLATION DETAILS DESCRIBED HEREIN ARE GENERIC AND MAY NOT REFLECT ACTUAL CONDITIONS FOR A SPECIFIC SITE. IF SITE CONDITIONS CAUSE INSTALLATION TO DEVIATE FROM THE REQUIREMENTS DETAILED HEREIN, A LICENSED ENGINEER OR ARCHITECT SHALL PREPARE SITE SPECIFIC DOCUMENTS FOR USE WITH THIS DOCUMENT.

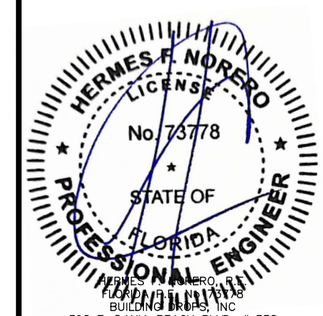

HERMES F. NORERO, P.E.
FLORIDA P.E. LIC. No. 73778
BUILDING DROPS, INC
398 E. DANIA BEACH BLVD. # 338
DANIA BEACH, FL 33004
FBPE CERT. OF AUTHORIZATION No. 29578

FL #: FL40954

DATE: 01.02.22

DWG. BY: SH | CHK. BY: HN

SCALE: NTS

DWG. #: ARC004

SHEET: 6 OF 6